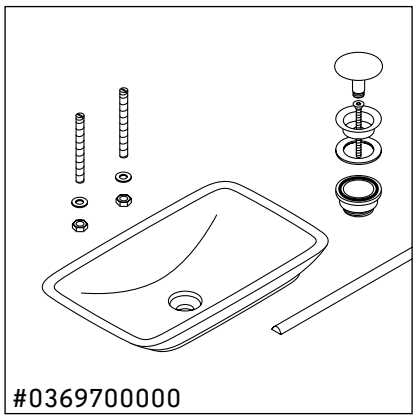
#0369700000

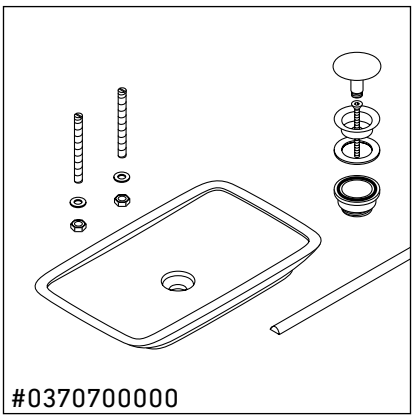
#0370700000

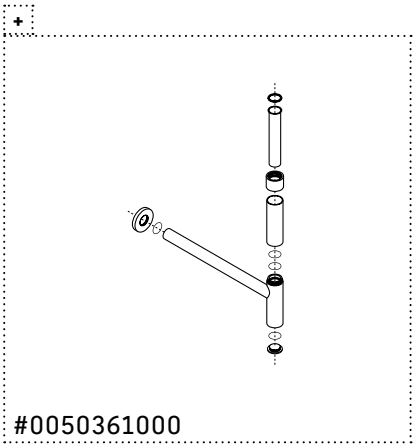
+
#0050361000

1

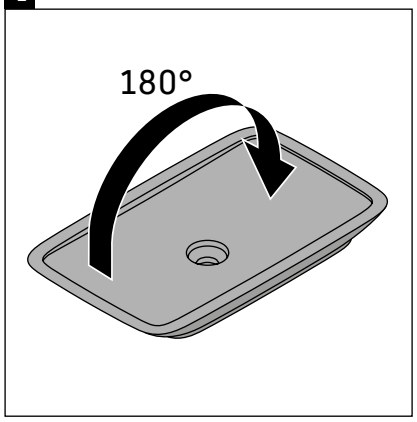
180°

2

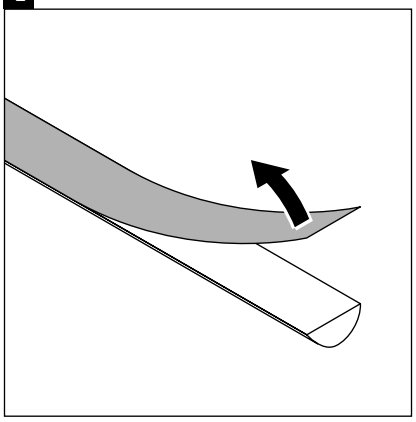

3

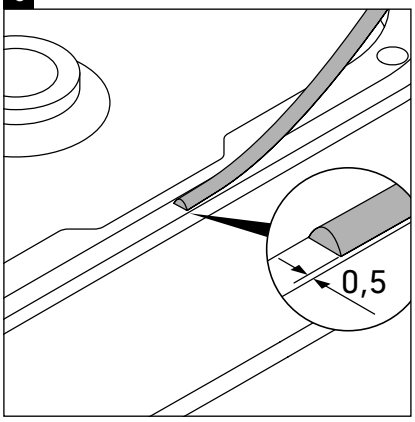
0,5

4

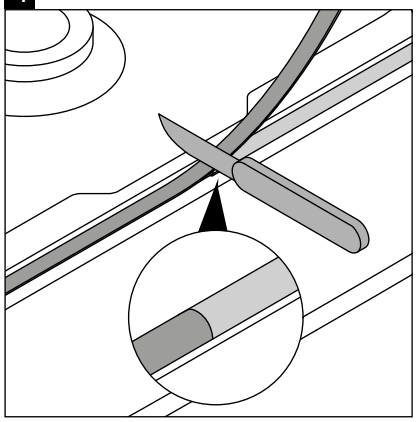

5

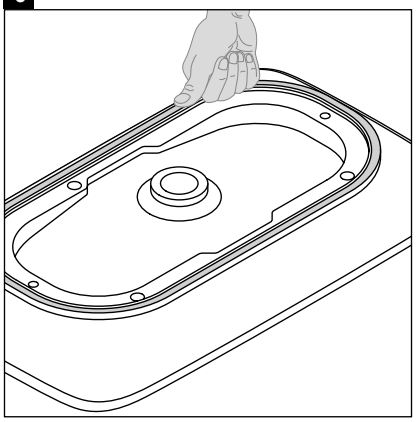

6

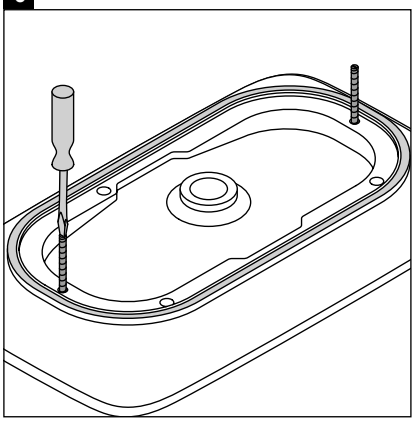

7

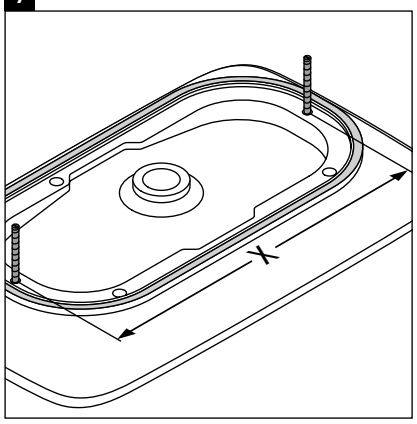
X

8

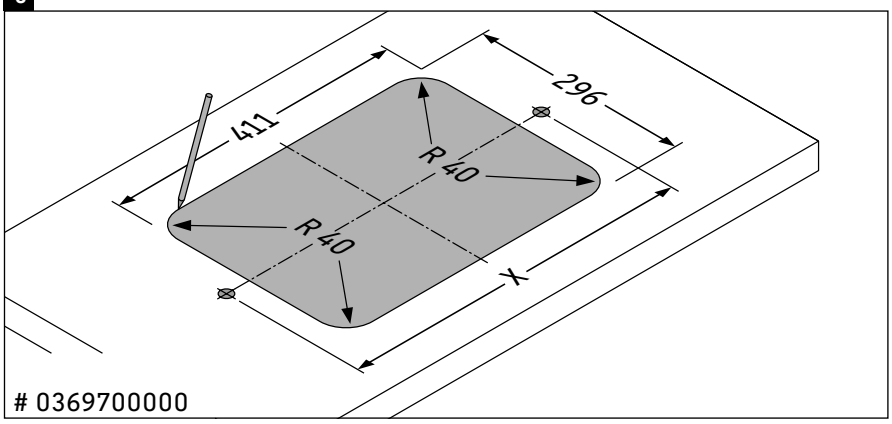
411
296
R 40
R 40
X
0369700000

9

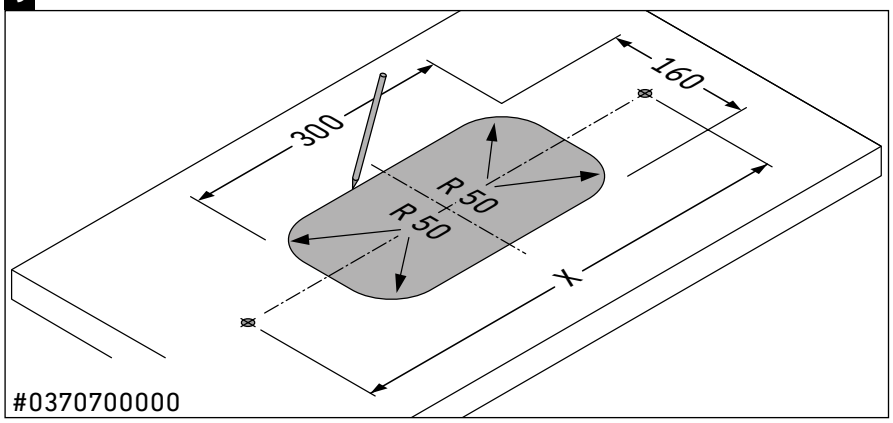

10

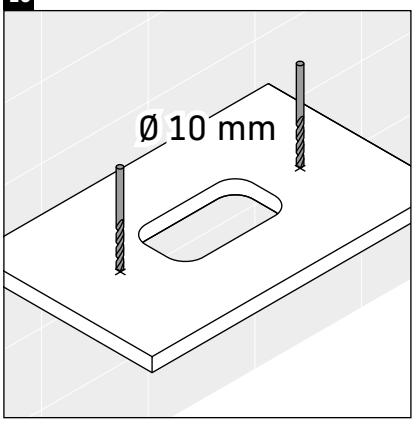

11

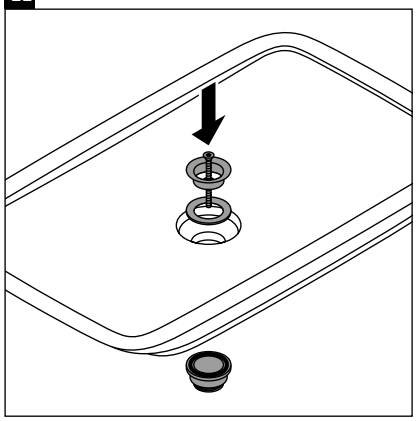

12

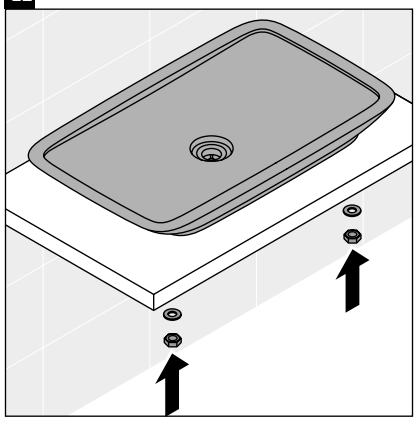

13

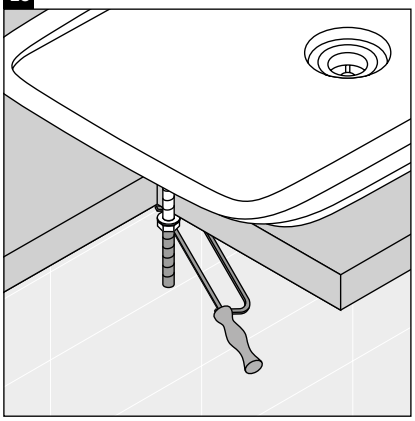

14

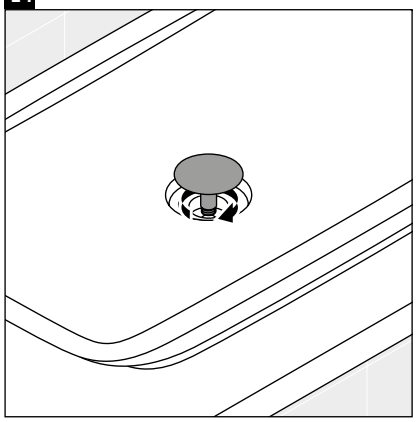

15

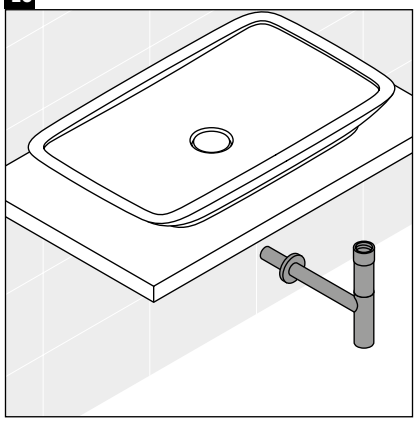

Best.-Nr. 51600/19.11.6 We reserve the right to make technical improvements and enhance the appearance of the products shown.

DURAVIT AG, Werderstr. 36, 78132 Hornberg, Germany, Phone +49 78 33 700, Fax +49 78 33 70 289, info@duravit.de, www.duravit.de